No. 43: A Small 10-Meter Very-Wide-Band Yagi

L. B. Cebik, W4RNL

Some 10-meter fans like to work not only the low end of the band for the CW, digital, and SSB activity, but also the upper end of the band, for a few rounds of nostalgic AM action. In this episode, we shall look at a 4-element Yagi that covers all of 10 meters with a 50-Ohm (direct feed) SWR under 2:1 and with at least 7 dBi of free-space gain (about the same as a narrow-band 3-element Yagi with the same boom length). The front-to-back ratio will dip below 20 dB only at the band edges. All of this will fit on a boom just over 8' long.

While we are at it, we shall look at some very sound assembly techniques for beam construction. This Yagi requires careful construction, and so we might as well use the best materials and techniques for putting it together. Even if you do not like the design, the construction methods are suitable to almost any 10-meter Yagi you might prefer.

The Basic Design

The Yagi consists of 4 elements, one of which is the 50-Ohm driver. Hence, we do not need a matching network, although a common-mode current suppressing choke--such as a 1:1 ferrite bead "balun" is always a good precaution at the feedpoint. There is a standard reflector, plus 2 directors. One of the directors is spaced close enough to the driver to count as a "slaved driver" to extend the performance of the antenna over the upper end of the band. **Fig. 1** shows the general outlines of the antenna.

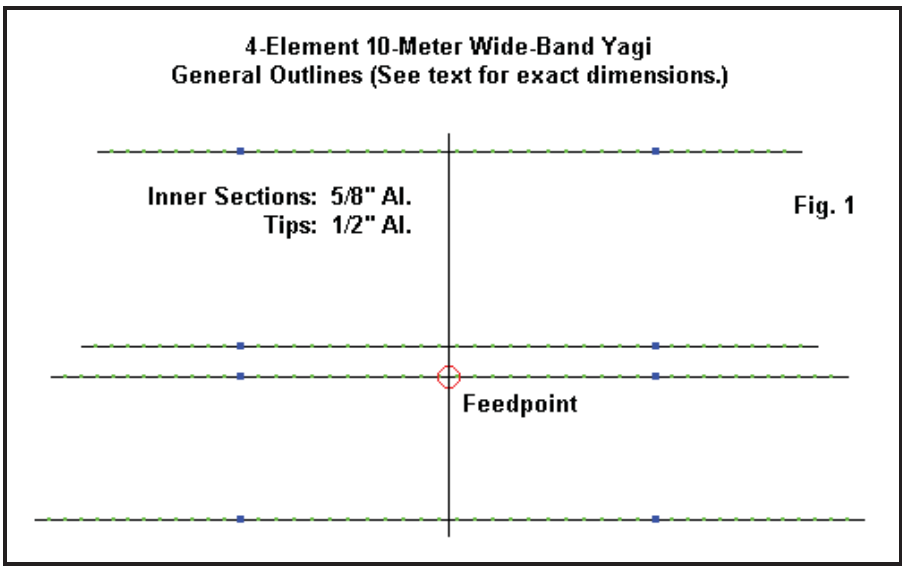

The boom length, including ends to support the element mounting plates, should be about 9' long. You c an make one from 6' long pieces of 1.25" and 1.125" aluminum by using a 6' and 3' section of each type, but placing the junctions at opposite ends of the boom. The elements consist of lengths of 5/8" aluminum at the

center with 1/2" aluminum tips. Obtain 6063-T832 high-grade aluminum tubes (by mail order, if necessary). Do not substitute elements of other diameters in this project, since the element interactions are very specific to the performance. All inner sections extend 54" from the element centers or the boom-line. The tip lengths will change from one element to the next in accord with the following table. Be sure to add 2 to 3 inches to the tip to fit inside the inner sections.

Element Lengths and Spacing: 4-Element Wide-Band 10-Meter Yagi

Element	Tip-to-Tip Length Inches	Outer Tip Length Inches	Space from Reflector Inches	Space from Preceding Element Inches
Reflector	215.5	53.75	----	----
Driver	207.2	49.6	37.5	37.5
Director 1	191.8	41.9	45	7.5
Director 2	182.6	37.3	96	51

Construction

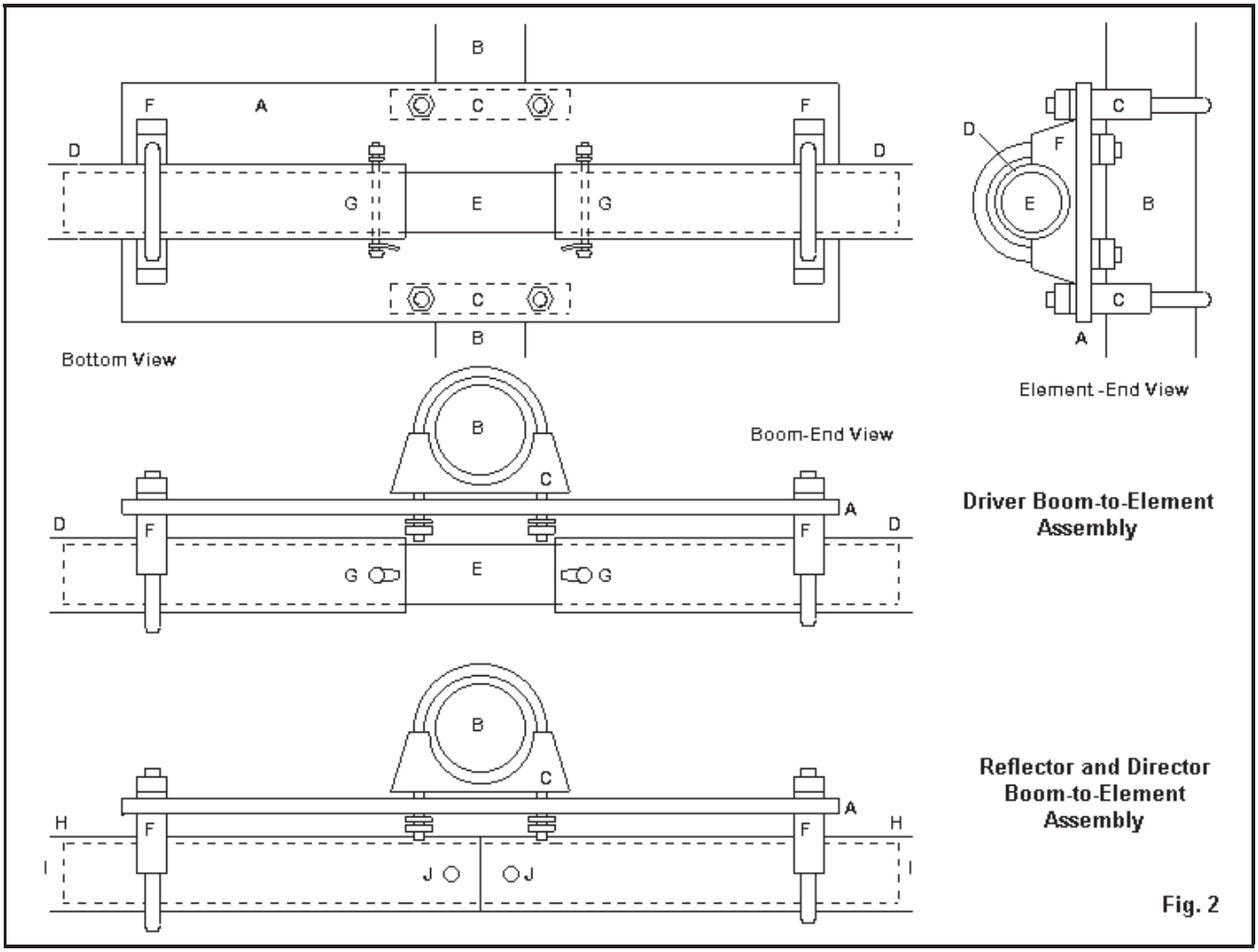

Fig. 2 shows the construction of high-quality junctions of the elements to the boom (B). Item A is a nonconductive plate (polycarbonate), about 9" by 6" by 1/4". Do not use metal plates, since the dimensions shown are based on well-insulated and isolated elements, relative to the boom. The boom attaches to the plate with U-bolts equipped with saddles to reduce tube compression. The U-bolts and all other hardware, including washers and lock washers should be stainless steel. The elements are secured to the plate with similar U-bolts (F), sized to the element diameter.

The driver assembly requires a gap--which is part of the overall element length, not an addition to it. Use a 1/2" diameter tube or fiberglass rod the length of the plate (E) to align the driver halves (D). Run #8 nut-bolt-washer-solder-lug combinations one each side of the driver (G) for connections. (See below for the coax connector). The parasitic elements use a simpler mount. Use 1/2" tubing the length of the plate as a junction between the parasitic element halves (H), with sheet metal screws (J) to complete the assembly.

Fig. 3 shows one good way to add a female coax connector to the driver plate, using one set of the U-bolt nuts to hold it in place. Use a short section of aluminum L-stock, 1" by 1" by 1/16" thick (J). Cut a 5/8" hole in one side of the stick for a standard 1-hole connector (K). Use the shortest leads feasible from the connector to the element solder lugs (G). Coat all exposed soldered connections and the rear of the coax connector with a plastic insulating material, like PlastiDip. Be sure that the connector and its plate are on the mast side of the driver element for the shortest, most direct coax run.

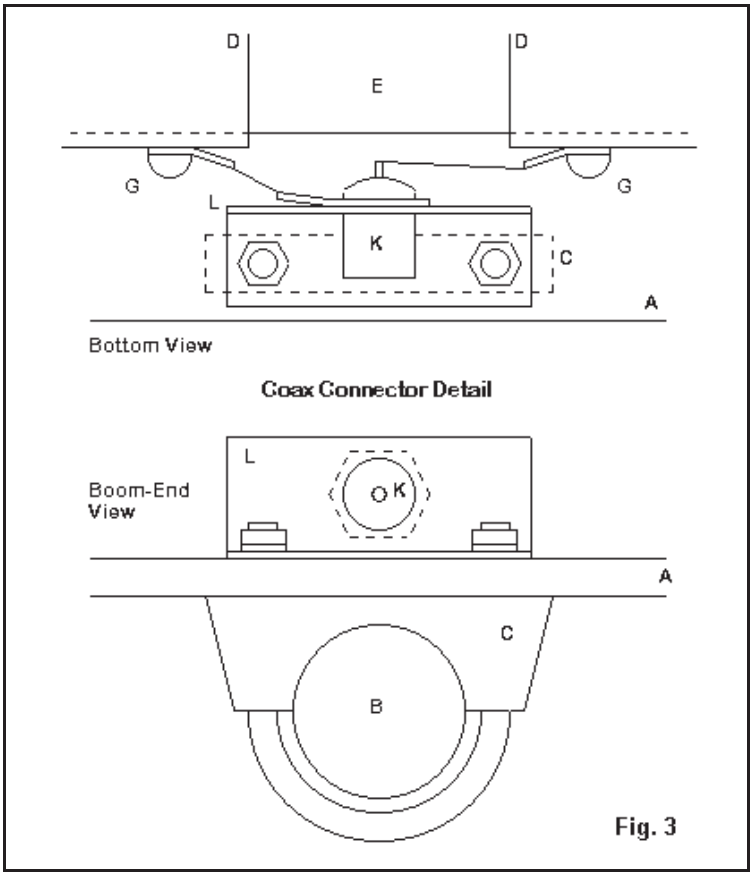

Fig. 3

Performance

How well does the antenna perform across 10 meters. The following table gives free-space figures across the band. Add about 5.5 dB to the gain for a height of about 1 wavelength.

Modeled Performance of the 4-Element Wide-Band 10-Meter Yagi

Freq. MHz	Gain dBi	F-B Ratio dB	Impedance R +/- jX Ohms	50-Ohm SWR
28.0	7.04	19.2	49.4 - j 8.2	1.18
28.25	7.02	22.0	49.7 - j 7.7	1.17
28.5	7.04	25.4	48.7 - j 5.6	1.13
28.75	7.10	30.7	47.4 - j 2.3	1.07
29.0	7.19	32.8	46.6 + j 2.0	1.09
29.25	7.31	25.9	47.1 + j 6.5	1.16
29.5	7.44	21.0	49.2 + j 9.5	1.21

29.7	**7.55**	**18.0**	**51.7 + j 8.4**	**1.18**

For a Yagi covering a 7% bandwidth, the gain is remarkably smooth, climbing gradually in the upper part of the band. The front-to-back ratio dips below 20 dB only at the band edges, but is still very good. The key to the SWR performance is the spacing and sizing of the driver and the first director. **Fig. 4** provides a graph of the 50-Ohm SWR across the entire 10-meter band. With proper construction, the 50-Ohm SWR should not rise above about 1.25:1 anywhere in the band.

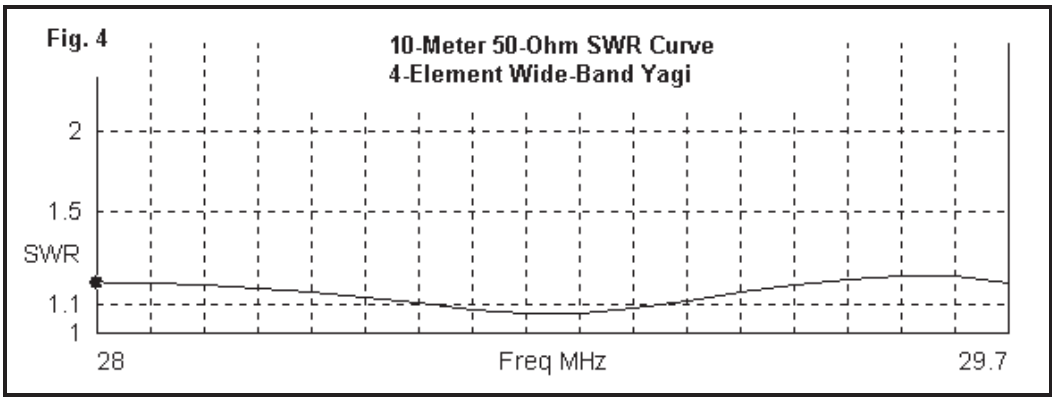

Since the antenna has a 50-Ohm feedpoint impedance, you do not need any kind of matching network. Direct coax feed is preferred. However, you may wish to install a ferrite bead choke of W2DU design (available from many sources, such as the Wireman of South Carolina) in order to attenuate common mode currents on your main feedline. Sources of other components include such places as Texas Towers for the aluminum tubing and DX Engineering for the stainless steel saddle U-bolts. All of these--and other suppliers--advertise in *QST*. These supply notes are not an endorsement of any particular provider, but only represent sources that I have successfully used.

Even if you do not need a very-wide-band Yagi, the construction methods shown here are sound for almost any Yagi design. If you are copying a magazine design, look carefully at how the elements are mounted to the boom. If the elements are separated electrically, your version should also do so; and likewise for a design that specifies electrical contact with the boom. These specifications are not interchangeable, since boom contact requires a redesign of element lengths to compensate for the contact. This design uses insulated element mountings.

If you ever thought that all Yagi designs were standardized, you now know differently. This little beam is an example of how Yagis can be designed to do specific jobs, and each job carries with it its own requirements for element length and spacing. You can explore past columns, as well as the *An-Ten-Ten-nas* book, for examples of other designs and the ways in which the design specifications affect the element lengths and spacing.